ZONE	REV.	REVISION DESCRIPTION	ECN NO.	DATE
	C	ADDED CONFIGURATION; GML	ECN0031608	12-OCT-2006

CONFIGURATION 1

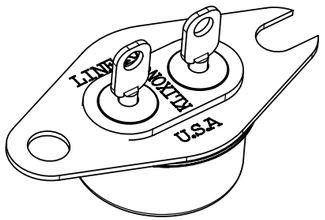

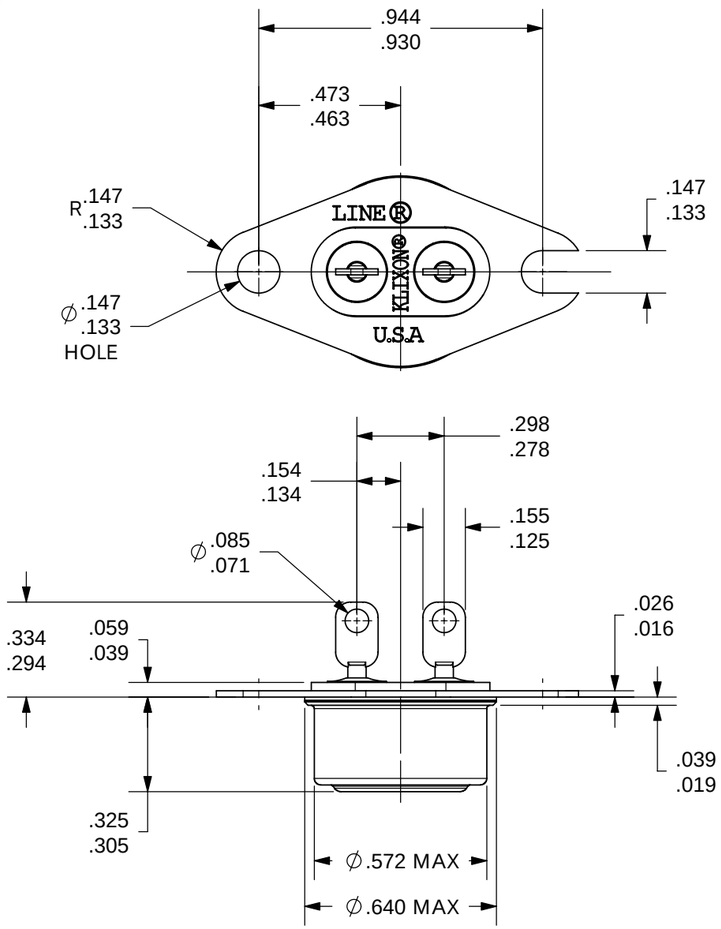

CONFIGURATION 2

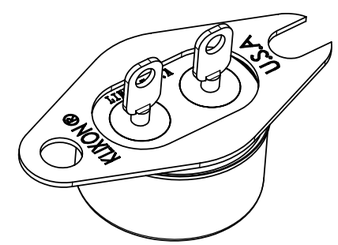

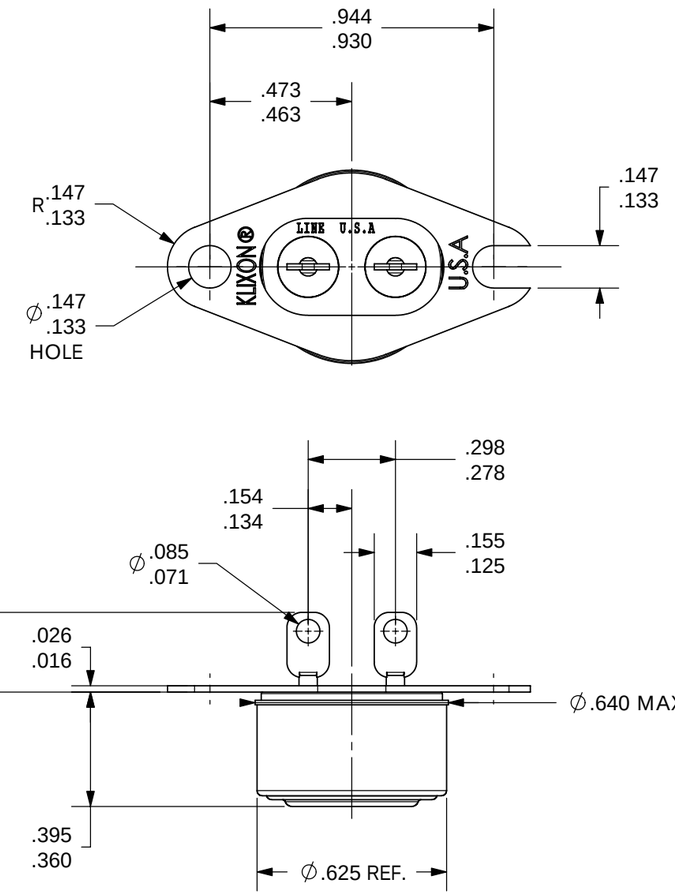

MATERIAL:
CONFIGURATION 1: COPPER-NICKEL PLATED CARBON STEEL
CONFIGURATION 2: UNPLATED 304L STAINLESS STEEL

DIELECTRIC STRENGTH:
TERMINAL TO CASE, 1250VAC, FOR 1 MINUTE

FOR REFERENCE ONLY, CHECK LATEST REVISION BEFORE USE.
PARTS MADE TO THIS PRINT MUST CONFORM TO E9898 REV. E

DRAWN CHAS. FLEURANT
DATE 7-MAY-1996

ENGINEER S.B. MARQUIS
DATE 7-MAY-1996

APPROVED
DATE

APPROVED
DATE

NEITHER THIS PRINT NOR THE INFORMATION CONTAINED HEREON IS TO BE USED AGAINST THE INTERESTS OF SENSATA TECHNOLOGIES OR AGAINST THE INTERESTS OF ANY OF ITS AFFILIATED COMPANIES OR WHOLLY OWNED SUBSIDIARIES

UNLESS OTHERWISE SPECIFIED DIMENSIONS ARE IN INCHES
TOLERANCES
DECIMALS ANGLES

THIRD ANGLE PROJECTION

DO NOT SCALE DRAWING

SIZE B

Sensata Technologies
529 PLEASANT STREET
P.O. BOX 2964
ATTLEBORO, MA 02703

TITLE
4344-145 THERMOSTAT
SPST AUTO, RESET SEALED
ENVELOPE DRAWING

DWG NO. 4344-145
REV. C

SCALE 2:1 | SOLIDWORKS | SHEET 1 OF 1

DEVICE: 4344-145
PROJECT: 256A